EXL®

ROTARY CONTROL VALVE

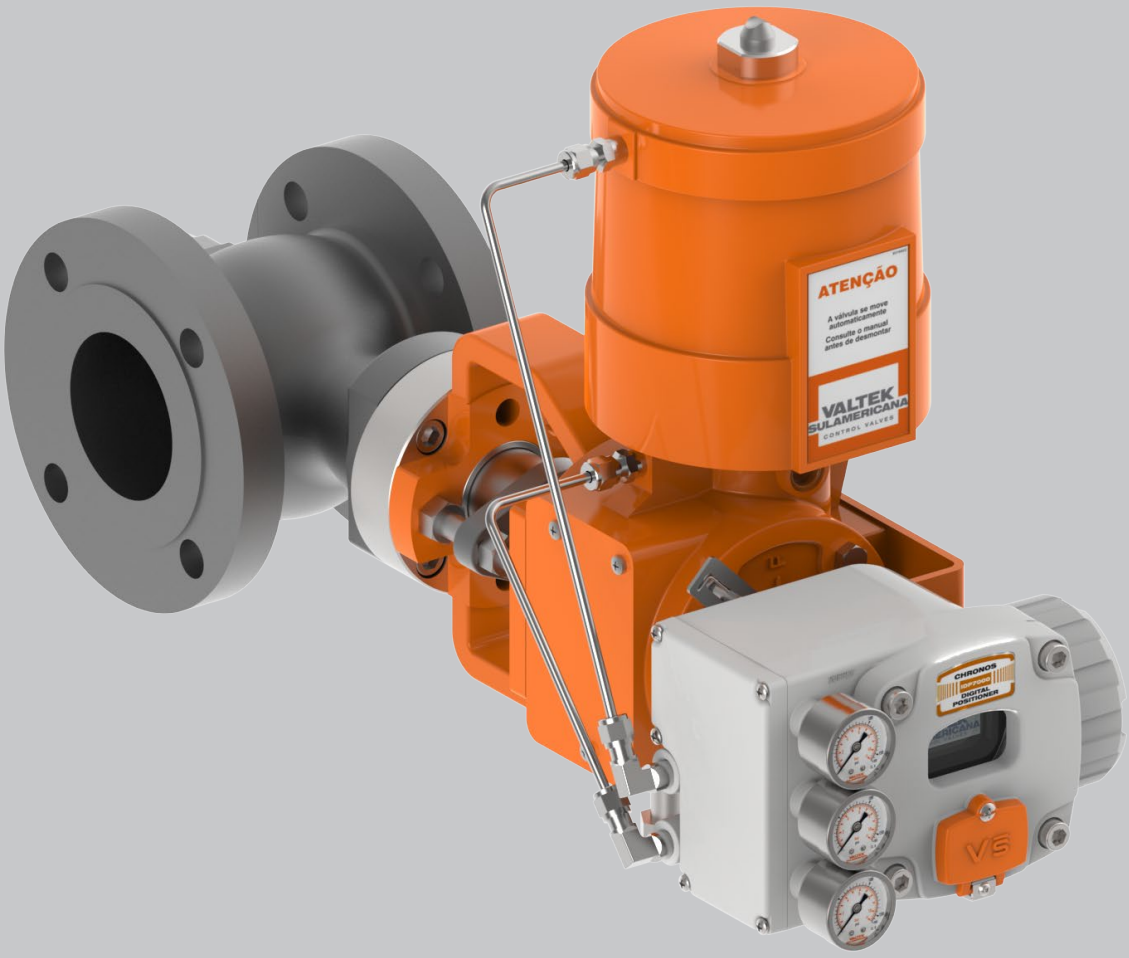

VALTEK™
SULAMERICANA

Rotary control valves are being used more and more due to their large flow capacity, high rangeability, compact sizes, superior shaft sealing capacity and a broad range of applications meaning the solution for several industrial process control.

The EXL® eccentric plug control valve was developed as a simple, lightweight and more economical alternative to the renowned and advanced design of Valtek Sulamericana eccentric plug control valve model EP.

The EXL® control valve was designed to handle differential pressures up to 725 psi (50 Bar), temperature range from –150 to 752°F (-100 to 400°C) and is available in sizes from 1 to 8 inches with ANSI classes 150 – 300 or DIN PN 16 – 40.

Its eccentric plug provides rangeability over 160:1, considered excellent when compared to the 30:1 rangeability of globe valves and 20:1 of the majority of butterfly valves.

For each valve size, several reduced trim are also available. Thanks to these trim options, it is possible to obtain a broad range of nominal Cv´s, allowing on several applications, an accurate and refined control of the fluid through the valve.

BODY SUB-ASSEMBLY (FIGURE 1)

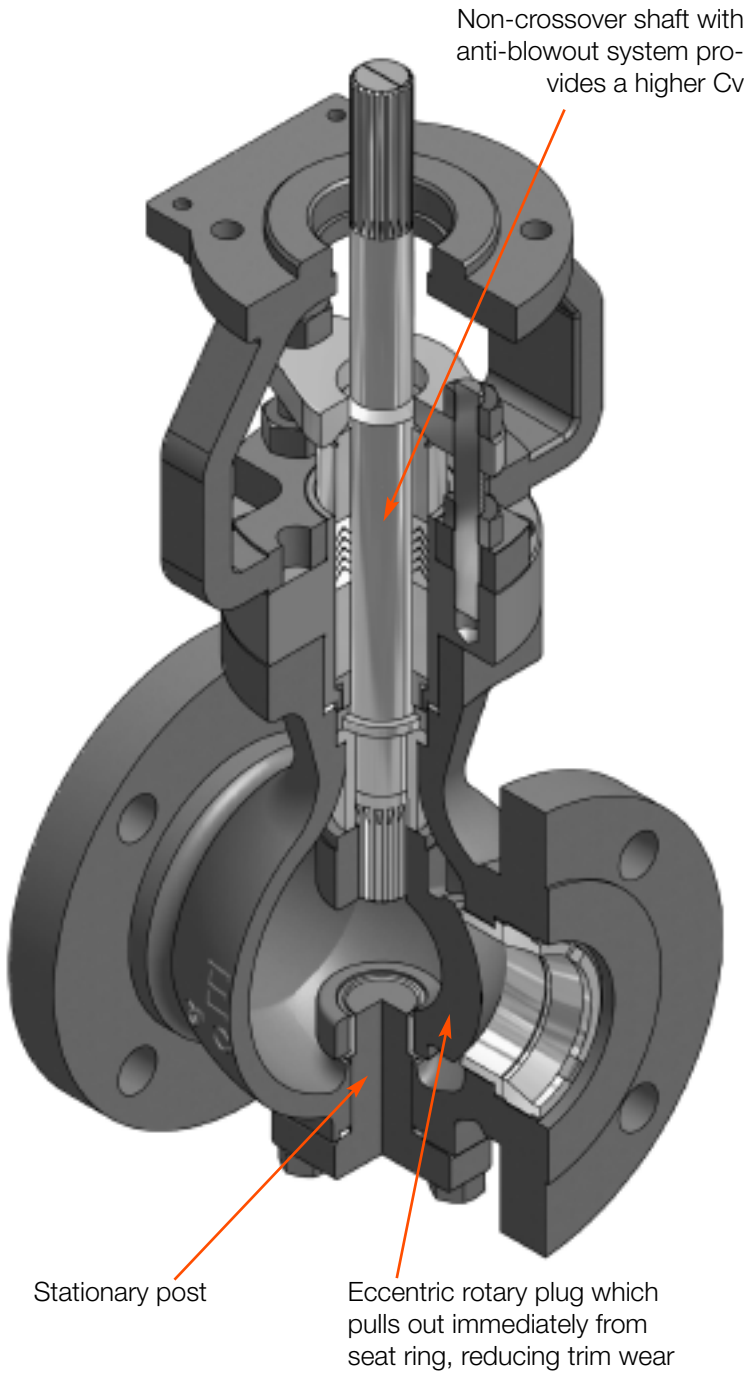

Rangeability higher than 160:1

ANSI Class IV Shutoff — Metal Seat
ANSI Class VI Shutoff — Soft Seat

VALVE OPEN (FIGURE 2)

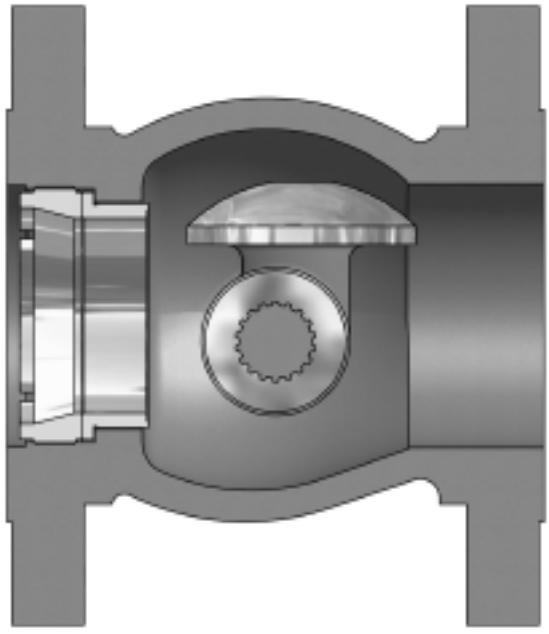

STATIONARY POST (FIGURE 3)

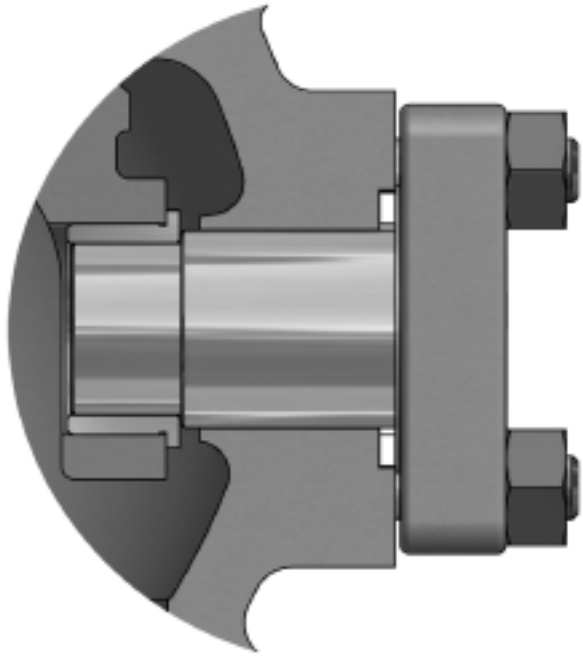

Reability

Equipped with a rugged and non-crossover shaft, which does not restrict the fluid flow, the EXL® valve provides higher capacity for each nominal size. Its advanced construction eliminates damages caused by corrosive/abrasive process fluids.

In most traditional rotary valves, the shaft usually passes through the valve body causing significant reduction of flow capacity and increasing shaft wear. The EXL® valve configuration ensures a high flow capacity. While in the open position, the streamlined flow passageway suffers no interference, since the plug is totally retracted into the body core.

When the plug moves to the closed position, its double eccentricity feature makes it turn into the seat at a tilting angle that eliminates metal-to-metal sliding contact (fig. 2). It also eliminates the wear that would require frequent maintenance, consequently reducing operating costs.

As the valve opens and the plug slides smoothly off the seat, the occurrence chances of water hammer effect are drastically reduced. Due to its "zero breakout torque" feature, the EXL® allows the use of smaller actuators, significantly reducing maintenance time and costs.

Since the shaft-plug does not cause flow restriction, the EXL® provides higher flow coefficient (Cv) than any other rotary plug control valve existing in the market.

The combination of a large and rugged stationary post (Fig. 3) with the oversized plug and shaft made from hardened 17-4PH as standard material provide excellent shutoff features and increase trim lifetime.

These characteristics combined with the use of: spring-cylinder actuators with proven lifetime longer than a million of cycles; HPP1500 Analog or HPP3000 and HPP3500 Digital Positioners, which provide and accurate and refined process control; Packing boxes with large depth that meet the EPA* requirements; Shaft with anti-blowout system that complies with ANSI B16.34; Trim with full area or reduced to 70% or 40% of area able to control a wide range of flow rates, make the EXL one of the most modern, advanced and accurate eccentric rotary plug valve in the world market.

*EPA = U. S. Environmental Protection Agency

ROTARY ACTUATOR SERIES RA-XL (FIGURE 4)

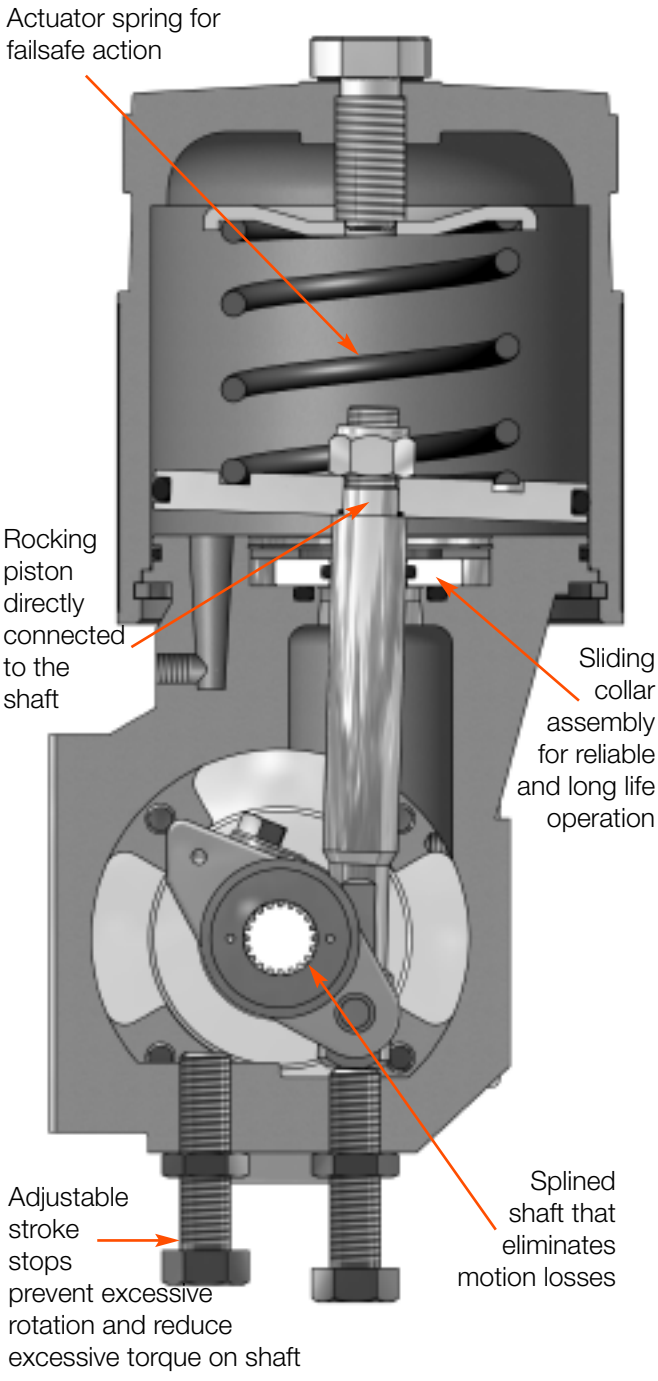

High parts interchangeability – Reduces the need for spare parts

Lightweight and compact design – Helps handling and needs limited space

Actuators

The RA-XL spring-cylinder rotary actuator combines high torque and pneumatic stiffness with an excellent controllability. These characteristics are integrated into a single, rugged, lightweight and compact assembly, which makes it the ideal choice for rotary valves driving.

The RA-XL double acting spring-cylinder actuator is designed to operate with air supply pressures up to 150 psi (10.3 Bar), reaching high operating torques. The actuator Series RA-XL has a proven lifetime longer than a million of cycles, which makes it the most reliable actuator in the market. The double acting positioner feeds both cylinder chambers simultaneously, ensuring an exceptional stiffness. This pneumatic stiffness makes the actuator Series RA-XL insuperable when an accurate control of the valve positioning is required, even when the valve is operating at small openings.

These features enable a much better performance of the actuator Series RA-XL when compared with the spring-diaphragm actuators.

ACTUATOR SPECIFICATIONS (TABLE I)

Type	■ Double acting cylinder with positive spring for failsafe action ■ Field reversible
Sizes	25, 50, 100, 200
Action	■ Air-to-Open ■ Air-to-Close ■ Fail-in-place
Air Supply Pressure	Up to 150 psi maximum 10.3 Bar maximum
Stroking Speed	Aprox. 1 inch/sec.*
Operating Temperature	-40 to 350°F (-40 to 175°C)
Auxiliary handwheel	■ Declutchable Side Assembly ■ Manual, gear operated ■ Lever
Positioners	■ HPP1500 Analog ■ HPP3000 Digital ■ HPP3500 Digital

* Sizes 25 and 50 with 60 psig air supply.

MATERIALS OF CONSTRUCTION (TABLE II)	
Yoke	Ductile Iron
Transfer Case	Anodized Aluminum
Splined Lever Arm	Nickel Plated Ductile Iron
Actuator Stem	UNS S 41600 Stainless Steel
Bearings	Teflon reinforced with fiberglass filaments
Sliding Collar	Delrin®, Aluminum
Cylinder Retaining Ring	Zinc Plated steel
Piston	Anodized Aluminum
Cylinder	Anodized Aluminum
O-rings*	Buna N (Standard)
Actuator Spring	Steel (corrosion proof)
Spring Button	Carbon Steel

* Room temperature higher than 180°F (82°C) require Viton o-rings. Temperatures lower than -40°F (-40°C) require Fluorsilicone o-rings.

Positioners

FOR THROTTLING APPLICATIONS, THE ROTARY ACTUATORS SERIES RA-XL ALLOW THE USE OF SEVERAL POSITIONER OPTIONS.

DIGITAL HPP3500 SERIES (FIGURE 5)

This positioner has the same characteristics of HPP3000, 4-20 mAcc input signal and HART® protocol. This project was developed to make easier the positioner installation on rotary actuators with NAMUR interface. Intrinsically safe, this positioner is provided with NEMA 4X and IEC IP66 enclosure and can handle air supply pressures from 20 to 100 psig (1.4 to 6.9 Bar) at operating temperatures from – 40 to 176°F (-40 - 80°C).

DIGITAL HPP3000 SERIES (FIGURE 6)

This is a high performance microprocessed positioner, compatible with HART®, DE and Fieldbus communication protocols or 4-20 mAcc analog signal, also programmable for several split range configuration. This positioner Series incorporates totally programmable functions such as: auto-tunning, manual and automatic modes, multiple communication protocols and diagnostic information, which contribute to increase productivity and efficiency of industrial plant operations and to lower maintenance. The digital positioner Series HPP3000 can handle air supply pressures from 20 to 100 psig (1.4 to 6.9 Bar) at operating temperatures from – 40 to 176°F (-40 to 80°C).

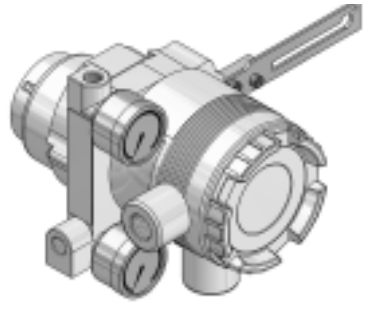

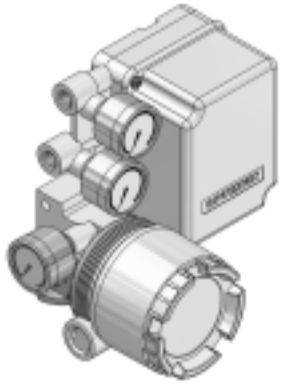

ANALOG HPP1500 SERIES (FIGURE 7)

This is a single or double acting high performance positioner. It allows the use of a pneumatic module for pneumatic input signals or an analog electro-pneumatic module for control signals in milliamps. Highly resistant and using the state-of-the-art technology, it works with air supply pressures up to 150 psig (10.3 Bar) without requiring air pressure regulators and withstands ambient temperatures from –40 to 176°F (-40 to 80°C). The positioner Series HPP1500 allows two or three split-range configurations with the use of a specific cam.

High performance

Equipped with rugged and oversized shaft and stationary post, positioned by bearings with a broad support surfaces, the design of EXL® shaft/bearing system provides remarkable wear reduction and considerably extends the valve lifetime.

The standard material for the valve plug is the stainless steel 17-4PH hardened by heat treatment. However, the trim (plug and seat) can be made also from Alloy #6, providing excellent shutoff features and extending the valve use to a wide range of applications such as, flashing process liquids, erosive services, mild cavitations and steam service.

The EXL® non-crossover shaft design prevents obstructions in the line, assuring a full flow passageway. When the valve is open, the fluid is not deviated towards the seat or the seat retainer, allowing great reliability even after many years in service.

The plug and driving shaft assembly is done by means of a precise splined connection, which eliminates the use of keys and pins that may be destroyed and lost due to corrosion or vibration effects. The sturdiness of the rigid and extra-strong seat makes the valve performance excellent for applications with high pressure drops. The typical maintenance cycle for the EXL® exceeds a 5-year period and its lifetime expectation exceeds a 20-years period.

BODY SPECIFICATIONS (TABLE III)

Sizes (inches)	1; 1.5; 2; 3; 4; 6; 8
End Connections	■ RF Flanges ■ Flangeless
Face Finish	125-250 Ra Standard
Ratings	■ ANSI Class 150-300 ■ DIN PIN 16 – 40
Face-to-Face Dimension	ANSI/ISA-75.08.02
Trim Area	■ 100% Full Area ■ 70% Reduced Area ■ 40% Reduced Area (1 to 6 in.)
Shutoff	■ ANSI Class IV with metal seat ■ ANSI Class VI with soft seat
Operating Temperature	-150 to 752ºF (-100 to 400ºC)

Additional Advantages

After evaluating the EXL® from the reliability point of view, other considerations shall be taken into account regarding its performance such as: Flow capacity up to 70% larger when compared to eccentric rotary plug valves from other manufacturers; Can be used on pulp and paper processes with consistency up to 3% due to its design with a non-crossover shaft; In closed position, its design allow pressure drops up to 725 psi (50 Bar); the valve can be mounted either with shaft upstream or downstream; Reduced trim with 70 or 40% of area; Shutoff ANSI class IV with metal seats or class VI with soft seats; Shaft with anti-blowout system which eliminates the risk of personnel injuries, fire and process shutdown; Fixed stationary post, which is not damaged by process fluid; 90° plug rotation allowed by using high performance double acting actuator with spring return for failsafe position.

FLOW DIRECTION (TABLE IV)

ASSEMBLY	FLOW DIRECTION	APPLICATION
Standard – right side	Shaft downstream Fluid towards the plug convex face	Clean Fluids Fluids with no cavitation and nor flashing
Standard – left side	Shaft upstream Fluid towards the plug back face	Fluids with solid particles, abrasive, flashing or cavitating fluids.

TEMPERATURE LIMITS FOR PACKINGS (TABLE V)

MATERIAL	TEMPERATURE*	
	˚F	˚C
PTFE "V" Rings	-150 to 450	-100 to 232
Braided PTFE	-150 to 500	-100 to 260
Graphite	-20 to 752	-28 to 400
PT	-20 to 450	-28 to 232
PTG	-20 to 450	-28 to 232
PTG XT	-20 to 550	-28 to 288

* The body rating and packing temperature vs. pressure limits shall not be exceeded.

STANDARD MATERIALS OF CONSTRUCTION
CARBON STEEL SUB-ASSEMBLY (TABLE VI)

ITEM	MATERIAL CLASSIFICATION	SPECIFICATION		
		ASTM CODE (AMS No.)	UNS Code	HARDNESS R_C
Body	Carbon Steel (Casting)	A 216 WCB	J 03002	
Plug	17-4 PH (Casting)	A 747 Gr CB7-Cu-1	J 92180	35-38
	316L // Alloy #6 (1)	A 351 CF3M // AMS 5387	J 92800 // R 30006	40-42
Shaft	17-4 PH (Bar)	A 564 Gr 630	S 17400	35
Post	17-4 PH (Casting)	A 747 Gr CB7-Cu-1	J 92180	35-38
Bearings (Plug and Shaft)	440C (Bar)	A 276	S 44004	55-60
Seat Retainer	316 (Casting)	A 351 Gr CF8M	J 92900	
Metal Seat	316 (Bar)	A 479 Gr 316	S 31600	
	420 (Casting)	A 743 Gr CA40	J 91153	38-45
	316L // Alloy #6 (1)	A 351 CF3M // AMS 5387	J 92800 // R 30006	40-42
Soft Seat	316 (Bar) // PTFE	A 479 Gr 316	S 31600	
Shaft Retainer	316 (Bar) // 440 (Bar)	A 479 Gr 316 // A 276	S 31600 // S 44004	8 // 55-60
Gland Flange	316 (Casting)	A 351 Gr CF8M	J 92900	
Packing Follower	316 (Bar)	A 479 Gr 316	S 31600	
Packing Spacers	316 (Bar)	A 479 Gr 316	S 31600	

(1) Solid Alloy #6 for valves with sizes up to 4 inches.

STANDARD MATERIALS OF CONSTRUCTION
STAINLESS STEEL SUB-ASSEMBLY (TABLE VII)

ITEM	MATERIAL CLASSIFICATION	SPECIFICATION		
		ASTM CODE (AMS No.)	UNS Code	HARDNESS R_C
Body	316 (Casting)	A 351 Gr CF8M	J 92900	
Plug	17-4 PH (Casting)	A 747 Gr CB7-Cu-1	J 92180	35-38
	316L // Alloy #6 (1)	A 351 CF3M // AMS 5387	J 92800 // R 30006	40-42
Shaft	17-4 PH (Bar)	A 564 Gr 630	S 17400	35
Post	17-4 PH (Casting)	A 747 Gr CB7-Cu-1	J 92180	35-38
Bearings (Plug and Shaft)	Ultimet	B 818	R 31233	30
Seat Retainer	316 (Casting)	A 351 Gr CF8M	J 92900	
Metal Seat	316 (Bar)	A 479 Gr 316	S 31600	
	316L // Alloy #6 (1)	A 351 CF3M // AMS 5387	J 92800 // R 30006	40-42
Soft Seat	316 (Bar) // PTFE	A 479 Gr 316	S 31600	
Shaft Retainer	316 (Bar) // Ultimet	A 479 Gr 316 // B 818	S 31600 // R 31233	8 // 30
Gland Flange	316 (Casting)	A 351 Gr CF8M	J 92900	
Packing Follower	316 (Bar)	A 479 Gr 316	S 31600	
Packing Spacers	316 (Bar)	A 479 Gr 316	S 31600	

(1) Solid Alloy #6 for valves with sizes up to 4 inches.

PRESSURE AND TEMPERATURE LIMITS FOR VALVE BODIES – ANSI B 16.34 (TABLE VIII)

MATERIAL	CLASS	PRESSURE		TEMPERATURE	
		PSI	BAR	˚F	˚C
Carbon Steel ASTM A 216 Gr. WCB	ANSI 150	285	19.7	-20 to 100	-29 to 38
		260	17.9	200	93
		230	15.9	300	149
		200	13.8	400	204
		170	11.7	500	260
		140	9.7	600	316
		125	8.6	650	343
		110	7.6	700	371
		95	6.6	750	399
	ANSI 300	740	51.0	-20 to 100	-29 to 38
		675	46.5	200	93
		655	45.2	300	149
		635	43.8	400	204
		600	41.4	500	260
		550	37.9	600	316
		535	36.9	650	343
		535	36.9	700	371
		505	34.8	750	399
Stainless Steel ASTM A 351 Gr. CF8M	ANSI 150	275	19.0	-20 to 100	-29 to 38
		235	16.2	200	93
		215	14.8	300	149
		195	13.4	400	204
		170	11.7	500	260
		140	9.7	600	316
		125	8.6	650	343
		110	7.6	700	371
		95	6.6	750	399
	ANSI 300	720	49.7	-20 to 100	-29 to 38
		620	42.8	200	93
		560	39.4	300	149
		515	35.5	400	204
		480	33.1	500	260
		450	31.0	600	316
		445	30.7	650	343
		430	29.7	700	371
		425	29.3	750	399

MAXIMUM ALLOWABLE PRESSURE DROP* (TABLE IX)

VALVE SIZE		SHAFT DIAMETER		SEAT DIAMETER (FULL AREA)		MAX. ALLOWABLE PRESSURE DROP* (90º ROT.)			
						SHAFT UPSTREAM		SHAFT DOWNSTREAM	
Inches	DN	Inches	mm	Inches	mm	PSI	BAR	PSI	BAR
1	25	0.44	10.8	.71	18.0	725	50	725	50
1.5	40	0.62	15.9	1.10	28.0	725	50	725	50
2	50	0.62	15.9	1.46	37.0	725	50	725	50
3	80	0.88	22.3	2.36	60.0	725	50	725	50
4	100	0.88	22.3	3.03	77.0	725	50	725	50
6	150	1.04	26.5	4.51	114.5	725	50	706	48.7
8	200	1.04	26.5	5.90	149.7	523	36.1	408	28.1

* Maximum allowable pressure drop based on shaft resistance with full area seat. Body rating shall not be exceeded.

THE EXL® PACKING BOX HAS A LARGE DEPTH AND AN EXCELLENT FINISH OF INTERNAL SURFACES, WHICH PROVIDES A LONGER OPERATING LIFE FOR THE WHOLE PACKING SET. DUE TO ITS DESIGN CHARACTERISTICS, THE EXL® PACKING BOX ALLOWS THE USE OF A LARGE VARIETY OF PACKING SYSTEMS FOR A BETTER COMPLIANCE WITH THE MOST STRINGENT STANDARDS CONCERNING FUGITIVE EMISSION CONTROL IN MODERN INDUSTRIAL PROCESSES.

STANDARD PACKING (FIGURE 8)

The standard packing of EXL® valves is comprised by PTFE "V" Rings. The PTFE "V" Rings have been the most largely used packing material for many years, with excellent tightness results. Its low friction characteristics, good mechanical strength and excellent corrosion resistance make it the most commonly used material for stem and shaft sealing. The PTFE "V" rings are used in the EXL® valve with operating temperatures from -150 to 450°F (-100 to 232°C).

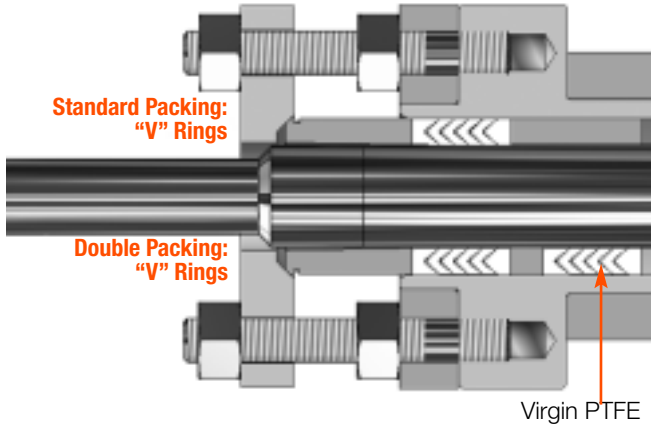

HIGH TEMPERATURE PACKING (FIGURE 9)

The EXL® packing with molded rings is an option when the operating temperature exceeds the limits of PTFE "V" rings. The materials used for EXL® molded packings are braided PTFE for operating temperatures up to 500°F (260°C) and graphite for operating temperatures up to 752°F (400°C). The graphite molded rings packing is an excellent solution for high temperature applications. However, the high force required for its sealing causes a considerably friction increase in the valve rotation.

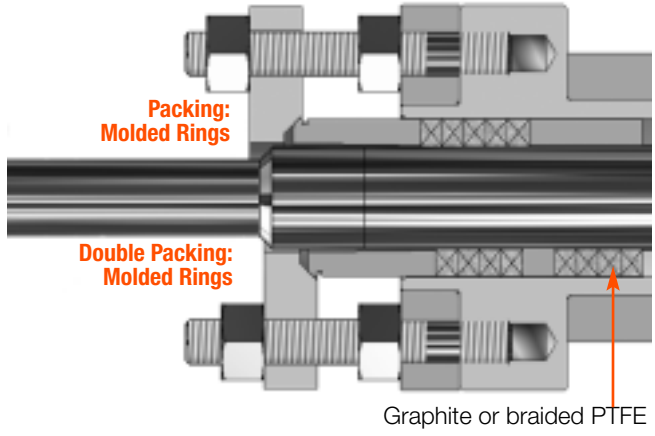

SPECIAL PACKINGS (FIGURE 10)

The PT packing type is comprised by a "V" rings set, uniformly and constantly compressed by a mechanical device which includes pairs of belleville washers that acts as springs and provides a "live load" effect. This system reaches a tightness level below 500 ppm. The PT packing type combines the superior quality of virgin PTFE rings with carbon filled PTFE rings. The PTG packing type is comprised by an advanced set of rings able to maintain levels of emission much lower than 500 ppm (usually 10 ppm). The PTG packing combines carbon filled PTFE "V" rings with Kalrez "V" rings, an advanced material which provides a superior packing performance. The PTG XT packing type is used for higher temperatures, up to 550°F (288°C). It uses Zymax "V" rings replacing the carbon filled PTFE rings.

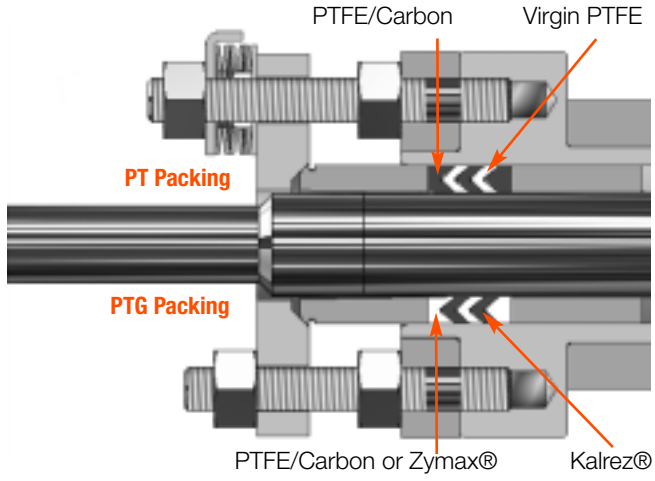

MAXIMUM ALLOWABLE PRESSURE DROP(1)(2) ACTUATOR VERSUS SUPPLY PRESSURE – BAR/PSI (TABLE X)

Valve Size (Inches)	Trim Area	Failure Position	Actuator Size															
			25								50							
			Air Supply Pressure															
			PSI	Bar	PSI	Bar	PSI	Bar	PSI	Bar	PSI	Bar	PSI	Bar	PSI	Bar	PSI	Bar
			60	4.1	80	5.5	100	6.9	150	10.3	60	4.1	80	5.5	100	6.9	150	10.3
1	100%	OPEN	725	50.0	725	50.0	725	50.0	725	50.0								
		CLOSED	725	50.0	725	50.0	725	50.0	725	50.0								
	70%	OPEN	725	50.0	725	50.0	725	50.0	725	50.0								
		CLOSED	725	50.0	725	50.0	725	50.0	725	50.0								
	40%	OPEN	725	50.0	725	50.0	725	50.0	725	50.0								
		CLOSED	725	50.0	725	50.0	725	50.0	725	50.0								
1.5	100%	OPEN	725	50.0	725	50.0	725	50.0	725	50.0								
		CLOSED	725	50.0	725	50.0	725	50.0	725	50.0								
	70%	OPEN	725	50.0	725	50.0	725	50.0	725	50.0								
		CLOSED	725	50.0	725	50.0	725	50.0	725	50.0								
	40%	OPEN	725	50.0	725	50.0	725	50.0	725	50.0								
		CLOSED	725	50.0	725	50.0	725	50.0	725	50.0								
2	100%	OPEN	725	50.0	725	50.0	725	50.0	725	50.0								
		CLOSED	540	37.2	540	37.2	540	37.2	540	37.2								
	70%	OPEN	725	50.0	725	50.0	725	50.0	725	50.0								
		CLOSED	725	50.0	725	50.0	725	50.0	725	50.0								
	40%	OPEN	725	50.0	725	50.0	725	50.0	725	50.0								
		CLOSED	725	50.0	725	50.0	725	50.0	725	50.0								
3	100%	OPEN	356	24.6	548	37.8	725	50.0	725	50.0	725	50.0	725	50.0	725	50.0	725	50.0
		CLOSED	112	7.7	112	7.7	112	7.7	112	7.7	369	25.4	369	25.4	369	25.4	369	25.4
	70%	OPEN	481	33.2	725	50.0	725	50.0	725	50.0	725	50.0	725	50.0	725	50.0	725	50.0
		CLOSED	159	11.0	159	11.0	159	11.0	159	11.0	499	34.4	499	34.4	499	34.4	499	34.4
	40%	OPEN	725	50.0	725	50.0	725	50.0	725	50.0	725	50.0	725	50.0	725	50.0	725	50.0
		CLOSED	256	17.7	256	17.7	256	17.7	256	17.7	725	50.0	725	50.0	725	50.0	725	50.0
4	100%	OPEN	206	14.2	322	22.2	439	30.3	725	50.0	725	50.0	725	50.0	725	50.0	725	50.0
		CLOSED	58	4.0	58	4.0	58	4.0	58	4.0	214	14.8	214	14.8	214	14.8	214	14.8
	70%	OPEN	298	20.6	461	31.8	624	43.0	725	50.0	725	50.0	725	50.0	725	50.0	725	50.0
		CLOSED	91	6.3	91	6.3	91	6.3	91	6.3	309	21.3	309	21.3	309	21.3	309	21.3
	40%	OPEN	427	29.4	655	45.2	725	50.0	725	50.0	725	50.0	725	50.0	725	50.0	725	50.0
		CLOSED	139	9.6	139	9.6	139	9.6	139	9.6	443	30.6	443	30.6	443	30.6	443	30.6

Valve Size (Inches)	Trim Area	Failure Position	Actuator Size															
			50								100							
			Air Supply Pressure															
			PSI	Bar	PSI	Bar	PSI	Bar	PSI	Bar	PSI	Bar	PSI	Bar	PSI	Bar	PSI	Bar
			60	4.1	80	5.5	100	6.9	150	10.3	60	4.1	80	5.5	100	6.9	150	10.3
6	100%	OPEN	298	20.6	445	30.7	592	40.8	706	48.7	706	48.7	706	48.7	706	48.7	706	48.7
		CLOSED	65	4.5	65	4.5	65	4.5	65	4.5	403	27.8	403	27.8	403	27.8	403	27.8
	70%	OPEN	396	27.3	588	40.6	725	50.0	725	50.0	725	50.0	725	50.0	725	50.0	725	50.0
		CLOSED	90	6.2	90	6.2	90	6.2	90	6.2	533	36.8	533	36.8	533	36.8	533	36.8
	40%	OPEN	613	42.3	725	50.0	725	50.0	725	50.0	725	50.0	725	50.0	725	50.0	725	50.0
		CLOSED	147	10.1	147	10.1	147	10.1	147	10.1	725	50.0	725	50.0	725	50.0	725	50.0
8	100%	OPEN	169	11.7	255	17.6	341	23.5	408	28.1	408	28.1	408	28.1	408	28.1	408	28.1
		CLOSED	32	2.2	32	2.2	32	2.2	32	2.2	230	15.9	230	15.9	230	15.9	230	15.9
	75%	OPEN	228	15.7	342	23.6	456	31.4	544	37.5	544	37.5	544	37.5	544	37.5	544	37.5
		CLOSED	47	3.2	47	3.2	47	3.2	47	3.2	309	21.3	309	21.3	309	21.3	309	21.3

(1) With downstream shaft and PTFE standard packings (2) Body rating shall not be exceeded.

MAXIMUM ALLOWABLE PRESSURE DROP ACROSS THE SEAT (TABLE XI)

Seat Type	Process Fluid	Open Position		Closed Position	
		Psi	Bar	Psi	Bar
Metal Seat	Liquids, Vapors	363	25	725	50,0
Metal Seat	Gases	725	50	725	50,0
Soft Seat	Liquids, Vapors	145	10	725	50,0
Soft Seat	Gases	290	20	725	50,0

Body rating shall not be exceeded.

GASKETS – PRESSURE AND TEMPERATURES LIMITS (TABLE XII)

Gasket Material	Pressure		Temperature	
	Psi	Bar	˚F	˚C
PTFE	725	50	350	176
316 SS/Grafoil	725	50	752	400

BODY SUB-ASSEMBLY – TRIM MATERIALS (TABLE XIII)

CARBON STEEL

Plug	Seat	Bearings	Shaft	Post
17-4 PH	316 SS/PTFE	440C stainless steel	17-4 PH	17-4 PH
17-4 PH	316 stainless steel	440C stainless steel	17-4 PH	17-4 PH
17-4 PH	420 stainless steel	440C stainless steel	17-4 PH	17-4 PH
316L /Alloy #6 (1)	316L stainless steel/Alloy #6 (1)	440C stainless steel	17-4 PH	17-4 PH

CARBON STEEL - NACE

Plug	Seat	Bearings	Shaft	Post
316L/Alloy #6 (1)	316 SS/PTFE	Ultimet	A 453 Gr 660	A 453 Gr 660
316L/Alloy #6 (1)	316 stainless steel	Ultimet	A 453 Gr 660	A 453 Gr 660
316L/Alloy #6 (1)	316L stainless steel/Alloy #6 (1)	Ultimet	A 453 Gr 660	A 453 Gr 660

STAINLESS STEEL

Plug	Seat	Bearings	Shaft	Post
17-4 PH	316 SS/PTFE	Ultimet	17-4 PH	17-4 PH
17-4 PH	316 stainless steel	Ultimet	17-4 PH	17-4 PH
316L/Alloy #6 (1)	316L stainless steel/Alloy #6 (1)	Ultimet	17-4 PH	17-4 PH

STAINLESS STEEL - NACE

Plug	Seat	Bearings	Shaft	Post
316L/Alloy #6 (1)	316 SS/PTFE	Ultimet	A 453 Gr 660	A 453 Gr 660
316L/Alloy #6 (1)	316 stainless steel	Ultimet	A 453 Gr 660	A 453 Gr 660
316L/Alloy #6 (1)	316L stainless steel/Alloy #6 (1)	Ultimet	A 453 Gr 660	A 453 Gr 660

(1) Solid Alloy #6 for valves with sizes up to 4 inches.

APPLICATION GUIDELINE (TABLE XIV)

FLUID	PLUG	SEAT	BEARINGS	FLOW DIRECTION
Air and Clean Gases*	17-4 PH	AISI 316	440C; Ultimet	Shaft Upstream
Liquid and Gaseous Hydrocarbons	17-4 PH Alloy #6	AISI 316 Alloy #6	440C; Ultimet 440C; Ultimet	Shaft Downstream Shaft Downstream
Industrial Liquids	17-4 PH	AISI 316	440C; Ultimet	Shaft Downstream
Clean Liquids with Cavitation or Flashing	17-4 PH Alloy #6	AISI 420 Alloy #6	440C; Ultimet 440C; Ultimet	Shaft Upstream Shaft Upstream
Non-clean, Muddy or Abrasive Liquids **Non-clean Liquids with Cavitation or Flashing**	Alloy #6 Alloy #6	Alloy #6 Alloy #6	440C; Ultimet 440C; Ultimet	Shaft Upstream Shaft Upstream
Non-corrosive Chemical Products	17-4 PH	AISI 316	440C	Shaft Downstream
Corrosive Chemical Products	17-4 PH Alloy #6	AISI 316 Alloy #6	Ultimet Ultimet	Shaft Downstream Shaft Downstream
Water Steam - 150 psi	17-4 PH	AISI 420	440C	Shaft Downstream
Water Steam - 300 psi	Alloy #6	Alloy #6	440C	Shaft Downstream

* Except O_2

PRESSURE RECOVERY FACTOR, F_L (FIGURE 11)

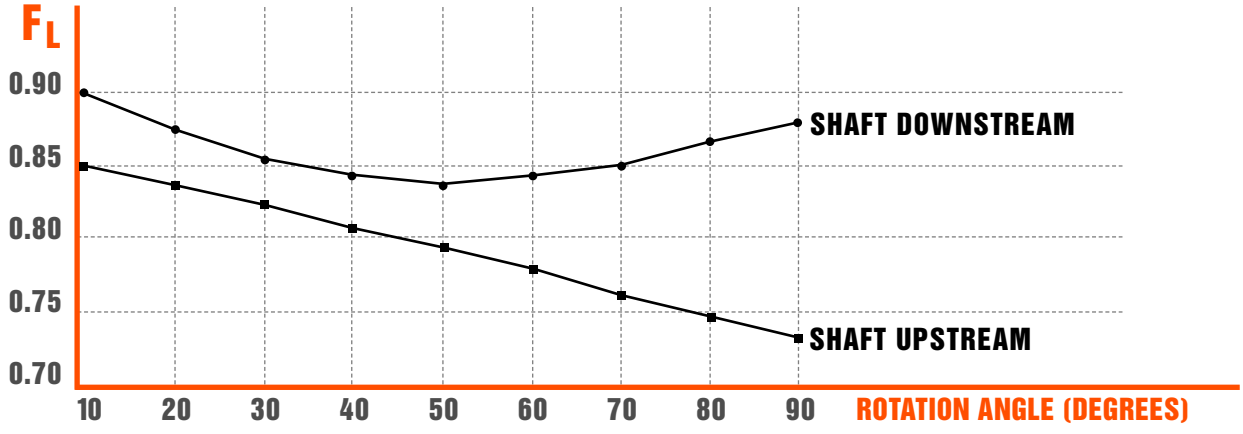

Influence of pipe size in flow coefficient

The nominal Cv values shown in Tables XVI and XVII are for assemblies where the valve, upstream and downstream piping have the same size. When the valve is concentrically installed in piping larger than the valve size, the Cv is affected and must be multiplied by the "FCT" factor according to table XV.

C_V CORRECTION FACTOR (TABLE XV)

TRIM AREA %	FCT CORRECTION FACTOR = d/D*						
	0.4	0.5	0.6	0.7	0.8	0.9	1
100			0.91	0.94	0.97	0.99	1
70	0.93	0.94	0.96	0.97	0.98	0.99	1
40	0.98	0.98	0.99	0.99	0.99	0.99	1

d = valve nominal size. D = larger piping size, upstream and downstream

FLOW COEFFICIENTS

SHAFT UPSTREAM – **FLOW**

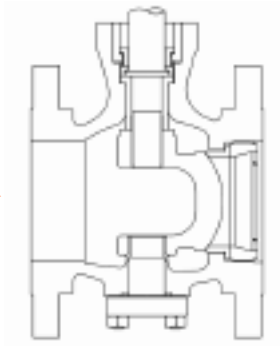

FLOW – SHAFT DOWNSTREAM

FLOW COEFFICIENTS (C_V) - SHAFT DOWNSTREAM (TABLE XVI)

Valve Size (Inches)	Trim Area (%)	OPENING ANGLE (DEGREES)																	
		90		80		70		60		50		40		30		20		10	
		METAL	SOFT	METAL	SOFT	METAL	SOFT	METAL	SOFT	METAL	SOFT	METAL	SOFT	METAL	SOFT	METAL	SOFT	METAL	SOFT
1	100	18	10.3	17	10.1	16	9.3	14	8.2	11.7	6.8	9.1	5.2	6.6	3.8	4.1	2.3	1.8	1.0
	70	13	7.1	12	6.9	11	6.4	9.6	5.7	7.9	4.7	6.1	3.6	4.5	2.6	2.7	1.6	1.2	0.7
	40	7.1	6.0	7.0	5.9	6.5	5.4	5.7	4.8	4.7	4.0	3.7	3.1	2.7	2.2	1.6	1.4	0.7	0.6
1.5	100	46	39	45	38	42	35	37	31	31	26	24	20	17	14.5	10.5	8.8	4.5	3.8
	70	33	33	32	32	30	30	26	27	22	22	17	17	12.2	12.3	7.3	7.4	3.2	3.2
	40	19	19	18	19	17	17	15	15	12.4	12.6	9.5	9.7	7.0	7.1	4.2	4.3	1.8	1.9
2	100	80	71	78	69	72	64	64	57	52	47	40	36	30	26	18	16	7.7	6.9
	70	51	51	50	50	46	46	41	41	34	34	26	26	19	19	11.4	11.5	4.9	4.9
	40	32	32	31	31	29	29	25	26	21	21	16	16	11.8	11.9	7.2	7.2	3.1	3.1
3	100	240	240	234	234	218	218	192	192	160	160	122	122	89	89	54	54	23	23
	70	178	178	174	174	161	161	143	143	118	118	91	91	66	66	40	40	17	17
	40	103	103	101	101	94	94	82	82	68	68	52	52	38	38	23	23	9.9	9.9
4	100	404	404	395	395	366	366	323	323	269	269	205	205	150	150	91	91	39	39
	70	266	266	260	260	241	241	213	213	177	177	135	135	99	99	60	60	26	26
	40	169	169	165	165	153	153	135	135	112	112	86	86	63	63	38	38	16	16
6	100	950	950	928	928	861	861	760	760	631	631	483	483	353	353	214	214	92	92
	70	665	665	648	648	602	602	531	531	441	441	337	337	247	247	149	149	64	64
	40	380	380	371	371	344	344	304	304	252	252	193	193	142	142	85	85	37	37
8	100	1697	1697	1658	1658	1538	1538	1358	1358	1128	1128	863	863	631	631	370	370	164	164
	75	1274	1274	1245	1245	1155	1155	1019	1019	847	847	648	648	474	474	287	287	123	123

FLOW COEFFICIENTS (C_V) - SHAFT UPSTREAM (TABLE XVII)

Valve Size (Inches)	Trim Area (%)	OPENING ANGLE (DEGREES)																	
		90		80		70		60		50		40		30		20		10	
		METAL	SOFT	METAL	SOFT	METAL	SOFT	METAL	SOFT	METAL	SOFT	METAL	SOFT	METAL	SOFT	METAL	SOFT	METAL	SOFT
1	100	20	12.0	20	11.9	18	11.0	16	9.7	13.4	8.1	10.2	6.2	7.4	4.6	4.5	2.8	2.0	1.2
	70	15	8.3	14.3	8.1	13.3	7.5	11.8	6.6	9.8	5.5	7.5	4.3	5.5	3.1	3.4	1.9	1.4	0.8
	40	8.4	6.0	8.2	5.9	7.6	5.5	6.7	4.8	5.6	4.0	4.3	3.1	3.1	2.2	1.9	1.4	0.8	0.6
1.5	100	47	39	46	38	42	35	38	31	31	26	24	20	17	14.5	10.6	8.8	4.5	3.8
	70	34	34	33	33	31	31	27	28	22	23	17	17	12.6	12.7	7.6	7.7	3.3	3.3
	40	19	19	18	18	17	17	15	15	12.6	12.6	9.6	9.6	7.0	7.0	4.3	4.3	1.9	1.9
2	100	78	70	76	68	71	64	62	56	52	47	40	36	29	26	18	16	7.5	6.8
	70	43	43	42	42	39	39	34	34	28	29	22	22	16	16	9.6	9.7	4.1	4.2
	40	24	24	24	23	22	22	19	19	16	16	12.3	12.2	9.0	8.9	5.4	5.4	2.3	2.3
3	100	213	213	208	208	193	193	171	171	142	142	108	108	79	79	48	48	20	20
	70	166	166	162	162	150	150	132	132	110	110	84	84	62	62	37	37	16	16
	40	94	94	92	92	86	86	75	75	63	63	48	48	35	35	21	21	9.2	9.2
4	100	308	308	301	301	279	279	246	246	205	205	157	157	114	114	69	69	30	30
	70	220	220	215	215	200	200	176	176	146	146	112	112	82	82	50	50	21	21
	40	148	148	145	145	134	134	119	119	99	99	75	75	55	55	33	33	14.3	14.3
6	100	735	735	718	718	666	666	588	588	488	488	374	374	273	273	165	165	71	71
	70	564	564	551	551	511	511	451	451	375	375	287	287	210	210	127	127	54	54
	40	326	326	318	318	296	296	261	261	217	217	166	166	121	121	73	73	31	31
8	100	1127	1127	1101	1101	1022	1022	902	902	749	749	573	573	419	419	253	253	109	109
	75	850	850	831	831	771	771	680	680	565	565	432	432	316	316	192	192	82	82

DIMENSIONS – VALVE WITH ACTUATOR AND HPP1500 POSITIONER

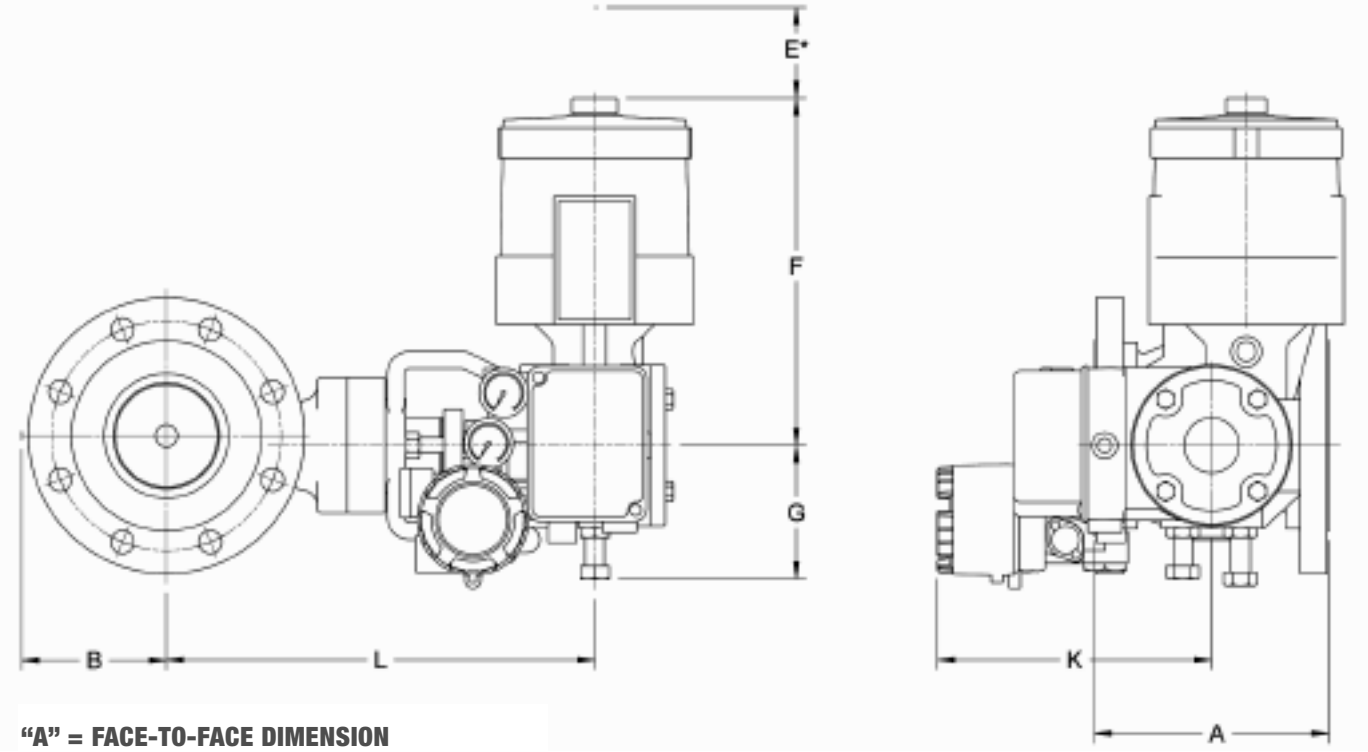

"A" = FACE-TO-FACE DIMENSION

DIMENSIONS (TABLE XVIII)

Valve Size (Inches)	ANSI class	Actuator Size	A		B		E*		F		G		K**		L	
			Inches	mm	Inches	mm	Inches	mm	Inches	mm	Inches	mm	Inches	mm	Inches	mm
1	150-300	25	4.0	102	2.7	69	6.0	152	13.2	335	4.6	116	8.9	227	10.6	268
1.5	150-300	25	4.5	114	2.8	71	6.0	152	13.2	335	4.6	116	8.9	227	11.6	294
2	150-300	25	4.9	124	2.9	74	6.0	152	13.2	335	4.6	116	8.9	227	11.7	296
3	150-300	25	6.5	165	4.0	102	6.0	152	13.2	335	4.6	116	8.9	227	13.8	350
	150-300	50	6.5	165	4.0	102	8.0	203	18.3	465	5.6	144	9.8	250	13.8	350
4	150-300	25	7.6	194	4.2	107	6.0	152	13.2	335	4.6	116	8.9	227	14.0	355
	150-300	50	7.6	194	4.2	107	8.0	203	18.3	465	5.6	144	9.8	250	14.0	355
6	150-300	50	9.0	229	6.7	171	8.0	203	18.3	465	5.6	144	9.8	250	17.9	455
	150-300	100	9.0	229	6.7	171	11.0	279	22.6	575	7.0	179	10.9	276	17.9	455
8	150-300	50	9.6	243	7.4	189	8.0	203	18.3	465	5.6	144	9.8	250	18.3	465
	150-300	100	9.6	243	7.4	189	11.0	279	22.6	575	7.0	179	10.9	276	18.3	465

*Clearance required for actuator disassembly. **For HPP1500 pneumatic positioner deduct 2.40 inches (61 mm) from dimension "K".

DIMENSIONS – VALVE WITH ACTUATOR AND HPP3500 POSITIONER

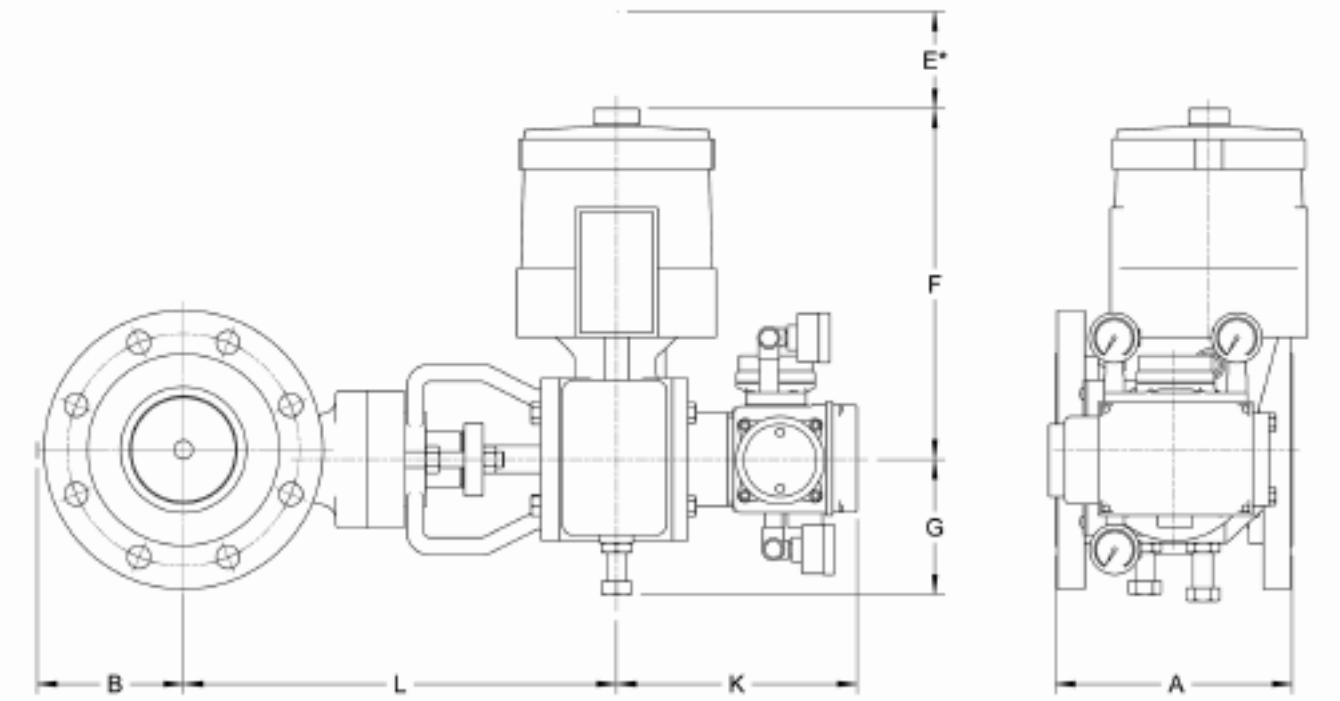

"A" = FACE-TO-FACE DIMENSION

DIMENSIONS (TABLE XIX)

Valve Size (Inches)	ANSI class	Actuator Size	A		B		E*		F		G		K		L	
			Inches	mm	Inches	mm	Inches	mm	Inches	mm	Inches	mm	Inches	mm	Inches	mm
1	150-300	25	4.0	102	2.7	69	6.0	152	13.2	335	4.6	116	7.8	197	10.6	268
1.5	150-300	25	4.5	114	2.8	71	6.0	152	13.2	335	4.6	116	7.8	197	11.6	294
2	150-300	25	4.9	124	2.9	74	6.0	152	13.2	335	4.6	116	7.8	197	11.7	296
3	150-300	25	6.5	165	4.0	102	6.0	152	13.2	335	4.6	116	7.8	197	13.8	350
	150-300	50	6.5	165	4.0	102	8.0	203	18.3	465	5.6	144	7.8	197	13.8	350
4	150-300	25	7.6	194	4.2	107	6.0	152	13.2	335	4.6	116	7.8	197	14.0	355
	150-300	50	7.6	194	4.2	107	8.0	203	18.3	465	5.6	144	7.8	197	14.0	355
6	150-300	50	9.0	229	6.7	171	8.0	203	18.3	465	5.6	144	7.8	197	17.9	455
	150-300	100	9.0	229	6.7	171	11.0	279	22.6	575	7.0	179	7.8	197	17.9	455
8	150-300	50	9.6	243	7.4	189	8.0	203	18.3	465	5.6	144	7.8	197	18.3	465
	150-300	100	9.6	243	7.4	189	11.0	279	22.6	575	7.0	179	7.8	197	18.3	465

*Clearance required for actuator disassembly.

ACTUATOR – MOUTING ORIENTATIONS

STANDARD RIGHT HAND MOUNTING – SHAFT DOWNSTREAM

MOUNTING A

AIR-TO-CLOSE: FAIL-OPEN

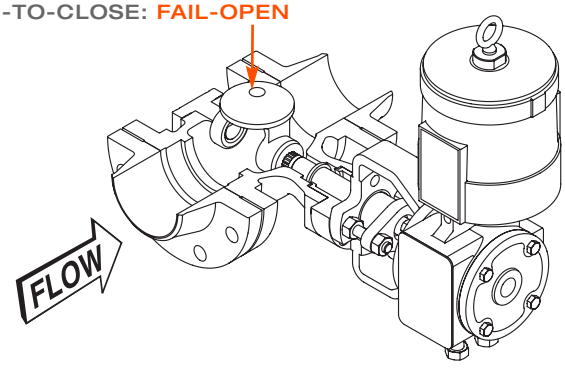

MOUNTING B

AIR-TO-OPEN: FAIL-CLOSE

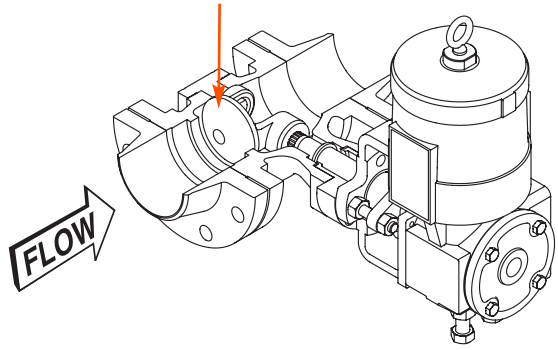

STANDARD LEFT HAND MOUNTING – SHAFT UPSTREAM

MOUNTING C

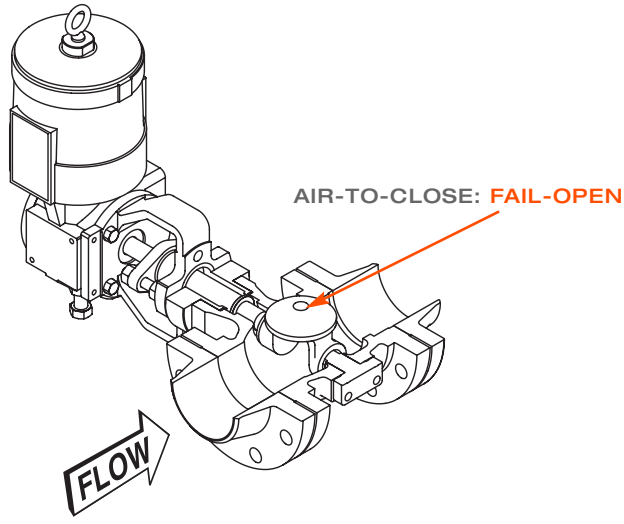

MOUNTING D

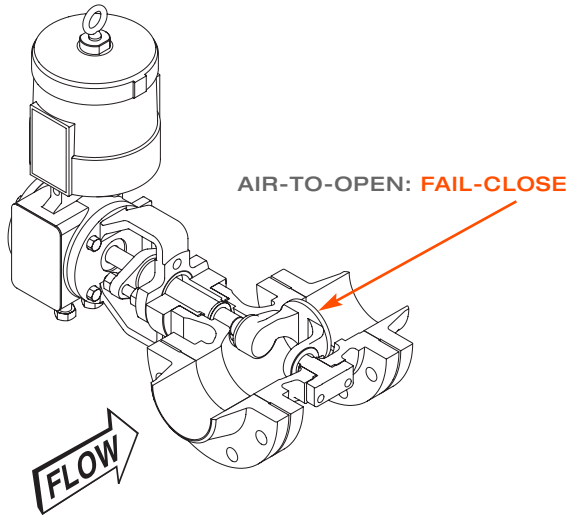

Quality Managment System

ISO 9001-2015

Certificado N° 311001 QM 15
DQS GmbH
DQS Brasil

ValtekSul Brasil

Main Office
Rua Goiás, 345 - Diadema - SP - **Brasil**
Phone: +5511 4072-8600
E-mail: sales@valteksul.com
www.valteksul.com
www.valteksul.com.br

VALTEK™ SULAMERICANA
THE CONTROL VALVES COMPANY